R&D Testing Units for Pharma, Agrochem & Fine Chemicals

How ILS can help you

We enable you to:

- Accelerate your R&D
- Reduce your costs through automation and software
- Improve reaction yields and selectivities
- Reduce the risk in R&D investments
- Find better catalysts

Our units are designed by researchers for researchers

What our clients say about us

"We've now quadrupled the throughput of experiments per week and this lets us become much more creative in our research. It's far easier to optimise promising hits, and the data quality is very good. We don't see any cross contamination and it's little effort to clean the reactors. If you work with ILS you will get a well-designed unit that really works."

Tomas Smeykal, Team Leader

"The ILS reactor system has worked very well and been a very reliable unit. It's a real workhorse! We've found it a very cost-effective research tool and saved time in our projects, and I'd recommend ILS to anyone considering working with them."

Kai Lovis, Senior Scientist

"We now have more screening power which helps us to run projects more quickly. We use this enhanced capability as a selling point to our customers and I'm very happy with what ILS provided. We worked together like partners and they gave us exactly what we needed."

Laurent Lefort, Research Scientist

A few examples of our work

Continuous Synthesis and Process Intensification

Problem

The client has almost no process know-how and needs to quickly attain the capability to synthesize unique ligands key to product development. The reactions are extremely exothermic.

ILS Solution:

A flexible modular unit with different-sized reactors. Both fixed-bed and slurry-phase reactors allow for different reactor types to be used.

Click for video on YouTube

Modular Batch/Conti design:

- 1 x Fixed-Bed Reactor
  - Tmax=550°C
  - Pmax=200 Barg
- 2 x CSTR
  - 100ml & 500ml
  - Catalyst Basket
- HC276
- Online Liquid Sampling
- Stripper for corrosive gas removal
- Fully Automated

High-Throughput Screening

Problem

Pharma clients have a need for a flexible & robust high-throughput screening tool for performing both standard and asymmetric hydrogenations. The ability to work with air & moisture-sensitive catalysts and corrosive solvents is essential.

ILS Solution:

A flexible modular unit with different-sized reactors from 5 to 50ml volume. A unique insert design prevents contact of media with air and completely eliminates the need to clean reactors.

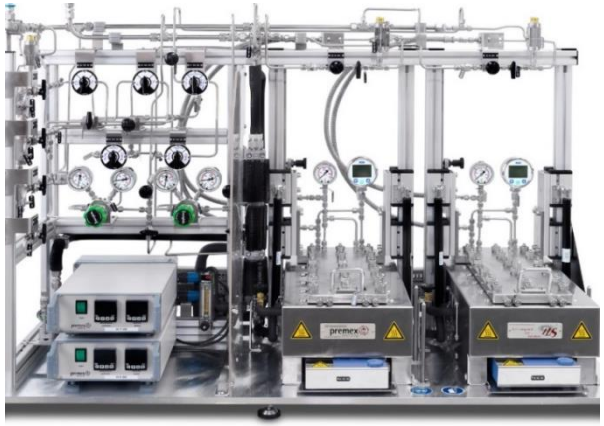

Reactor design:

- 10 x 96 reactors
- Tmax=300°C
- Pmax=300 Barg
- 316SS / optional HC276
- 5 to 50ml
- No exposure of contents to air/moisture!
- Glass Liners = No cleaning!

High Throughput Batch Screening

- Low-Cost
- Extremely easy to operate
- Little automation = robust

Process Optimization

Problem Pharma & Agrochem clients require a flexible batch-scale unit capable of operating with air & moisture sensitive catalysts. The platform should provide high-quality data both for catalyst testing as well as for process-optimization

ILS Solution A fully-automated parallel batch testing unit with integrated glove-box and slurry handling robot.

Reactor design:

- 4 x 500ml/1000ml Reactors
- Tmax=300°C
- Pmax=200 Barg
- 316SS / optional HC276
- Glovebox with slurries-handling robot
- No exposure of contents to air/moisture!
- Each Reactor Fully Independent

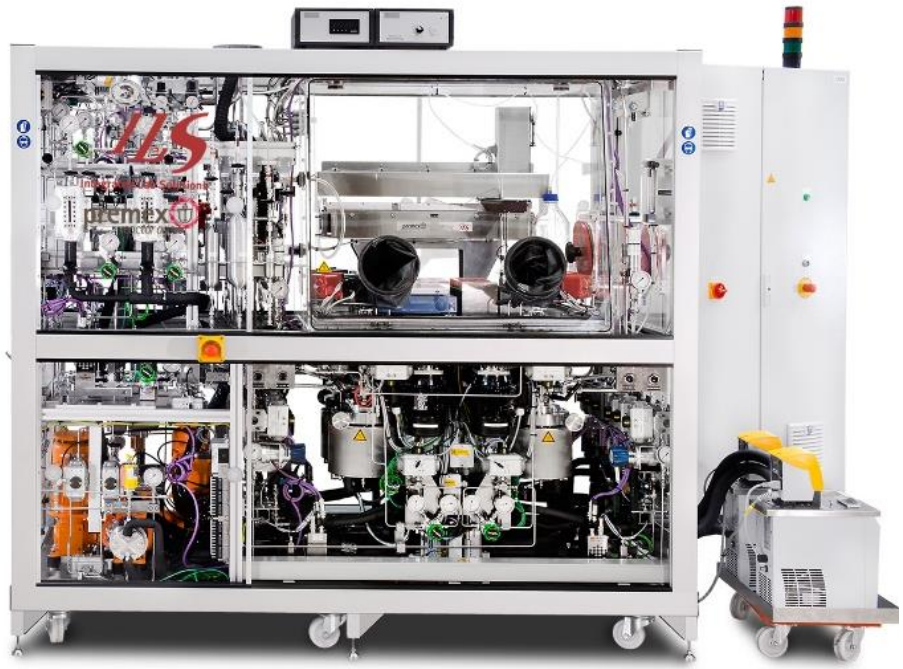

Click for video on YouTube

Process Optimization

Problem Pharma & Agrochem clients require a flexible batch-scale unit capable of operating with air & moisture sensitive catalysts. The platform should provide high-quality data both for catalyst testing as well as for process-optimization

ILS Solution A fully-automated parallel batch testing unit with integrated glove-box and slurry handling robot.

Medium Throughput Batch Screening

- Fully-Automated system
- Rigorous removal of air and water
- Ideal for process optimization
- Kinetic Testing
- High-Quality Data
- Scalable

Parallel Flow-Chemistry

Problem There is an increasing need in the pharma and agrochem world for flexible platforms to study continuous-flow catalyst R&D as an alternative to traditional batch testing.

ILS Solution ILS provides an assortment of parallel fixed-bed systems for continuous flow testing of heterogeneous catalysts.

- Extrudate-Testing
- 50-500g
- 6-12 Parallel Reactors
- Scalable Mini-Pilot

Play video YouTube

- Powder-Testing
- 10-1000mg
- 16-64 Parallel Unit
- High-Throughput Testing

Play video YouTube

- Liquid and trickle flow applications
- Downflow & upflow systems
- Pressure application range between 10 bar(g) up to 300 bar(g)
- Reactor temperatures from -40°C to 800°C
- Integrated gas/liquid separations, online stripping columns, distillation
- Fully automated pneumatic or robotic liquid sampling
- Online mass balance calculation (+/-2%)

Batch-Scale Materials Preparation

Problem A major manufacturer required a pilot-scale unit for performing materials synthesis. pH control was critical to ensure the product had the desired chemical properties.

ILS Solution ILS developed a completely custom, fully-automated, constant-pH co-precipitation unit

- 50L Glass Reactor
- Dynamic Thermostat for tight +/-0,5°C temperature control of catalyst precipitation
- pH-controlled precipitation for proprietary catalyst synthesis method possible.
- Reflux condensor
- Powerful agitator
- Bottom drain for easy catalyst precipitate removal
- Fully automated

Adsorbent Development

Problem A materials supplier requires a quality-control device to assess the performance of their HCl adsorption materials. It has to be easy-to-operate, be very safe and have a minimum footprint and be very reliable.

ILS Solution Fully-automated, 6-Parallel HCl adsorption testing unit

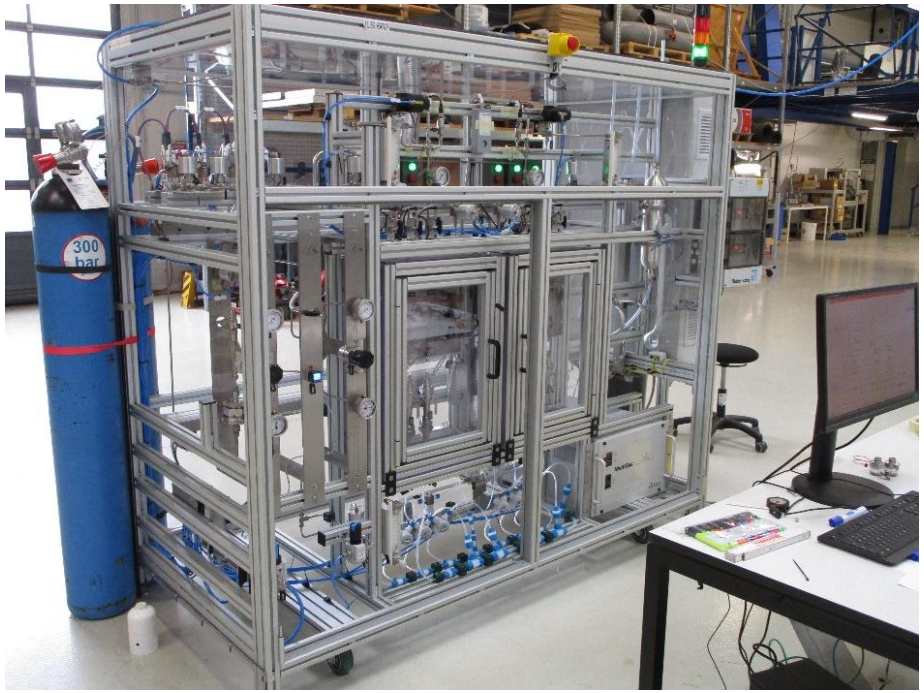

Click for video on YouTube

- 6-Parallel HCL Gas-Phase Testing Unit
- Fully-Integrated On-Line FTIR analytics
- 0-10 Barg (can optionally be higher)
- RT-100°C (can optionally be higher)
- Fully Automated
- HCL resistant materials used (HC276+PTFE)
- Extensive HCl safety measures (gas detection, automated locks, etc)

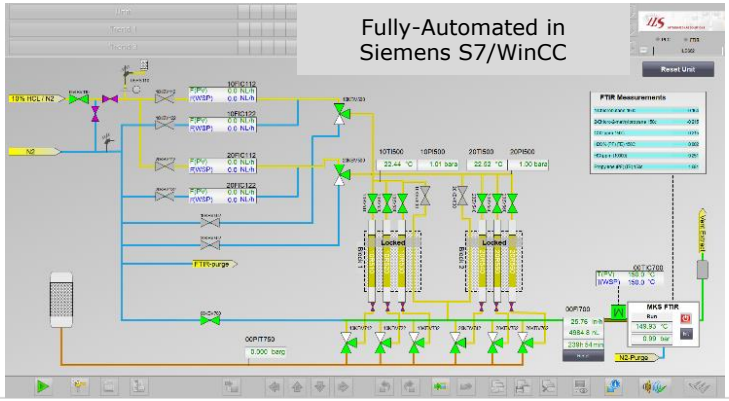

Adsorbent Development

Problem A materials supplier needs a robust quality-control unit for testing phenol selective-adsorption materials.

ILS Solution Fully-automated, 8-Parallel phenol adsorption testing unit

Refill tanks in ATEX conform chemical cupboard

- 8-Parallel Phenol Adsorbent Testing Unit
- Online Liquid Sampling Robot
- 100 Barg
- 200°C
- Fully Automated
- ATEX compliant feed section

Fully-Automated Liquid-Sampling collector acquires samples for offline analysis

Client Overview

ILS

Energy & Petrochemical

REPSOL, NESTE OIL, AkzoNobel, TOTAL, SASOL

Pharma

syngenta, Givaudan, Boehringer Ingelheim, BAYER, DSM, MERCACHEM

Universities R&D Centers

TU Clausthal, C2P2, FAU, GHENT UNIVERSITY, university of groningen, Fraunhofer

Polymers

TOTAL, SOLVAY, INSA, sabic, ARKEMA, EVONIK

Catalysts

JM, GRI, POROCEL, CLARIANT, HALDOR TOPSOE, ALBEMARLE

Automotive

BMW, SCANIA, DEUTZ, Fraunhofer IKTS, automotive engineering iav, VW

ILS actively collaborates with the world's leading research centers

Contact one of our experts to learn more about how we can help you improve and accelerate your catalyst R&D.

info@integratedlabsolutions.com

http://www.integratedlabsolutions.com

www.youtube.com/user/ILSBerlin/videos